REVISIONS		
ISS	ZONE	DESCRIPTION\PER REQUEST\DATE
V	OPEN	Open drawings to customers

ENOVA - PROFESSIONAL AUDIO CABLE

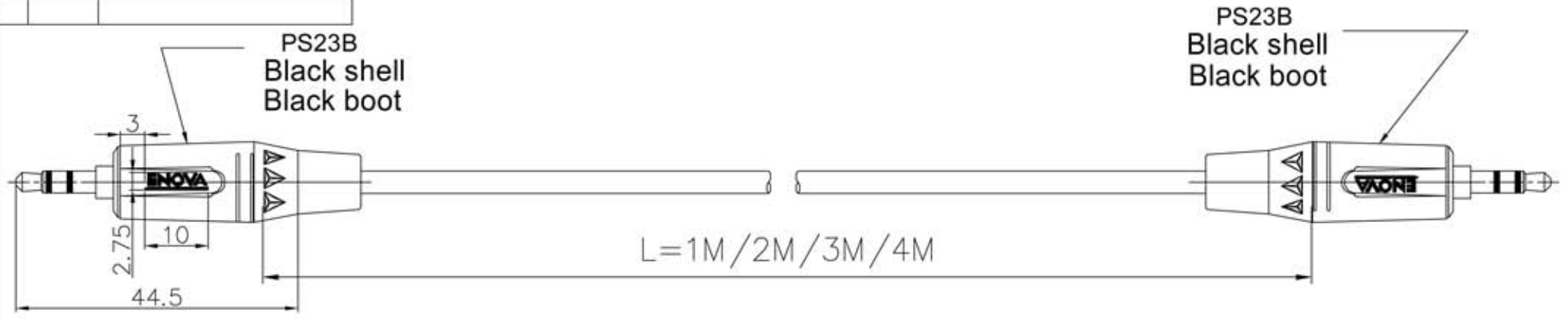

CABLE NO.:EC-A2-Bulk-100

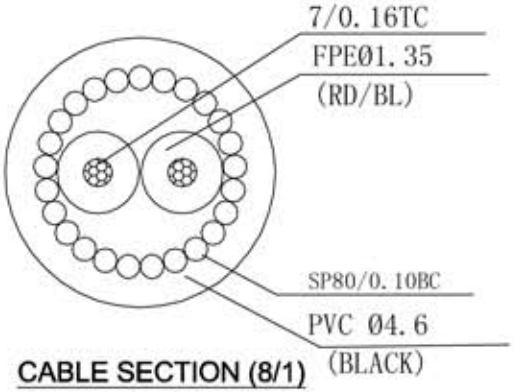

CABLE SECTION (8/1)

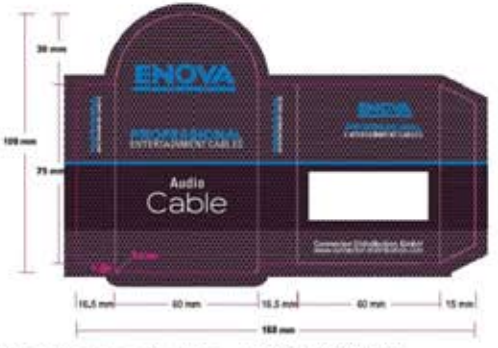

Small size sleeve: 168x109MM

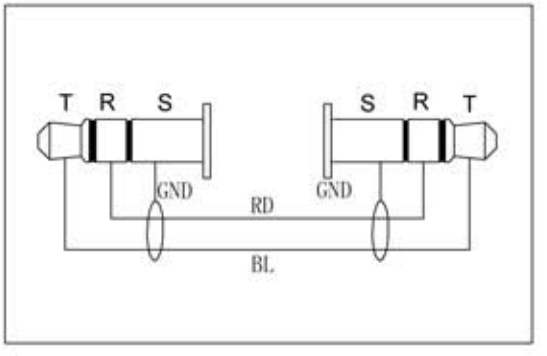

Part No.
EC-A2-PSMM3-1
EC-A2-PSMM3-2
EC-A2-PSMM3-3
EC-A2-PSMM3-4

DIMENSIONS ARE IN MILLIMETERS	APPROVED	DATE	Connector Distribution GmbH
UNLESS OTHERWISE SPECIFIED TOLERANCES ANGLES = ±5° UP TO 6 = ±0.2 6–40 = ±0.4 40–120 = ±0.6 120–315 = ±1 ABOVE 315 = ±50	CHECKED	DATE	
	DRAWN QINSUN	DATE 2020-01-03	TITLE 3.5MM STEREO TO 3.5MM STEREO(L=1M/2M/3M/4M)
	FILE NO.		
THIRD_ANGLE	ERP LINK:		PART NO. EC-A2-PSMM3-1 REV. A1
SCALE 1/1			